HORIZON
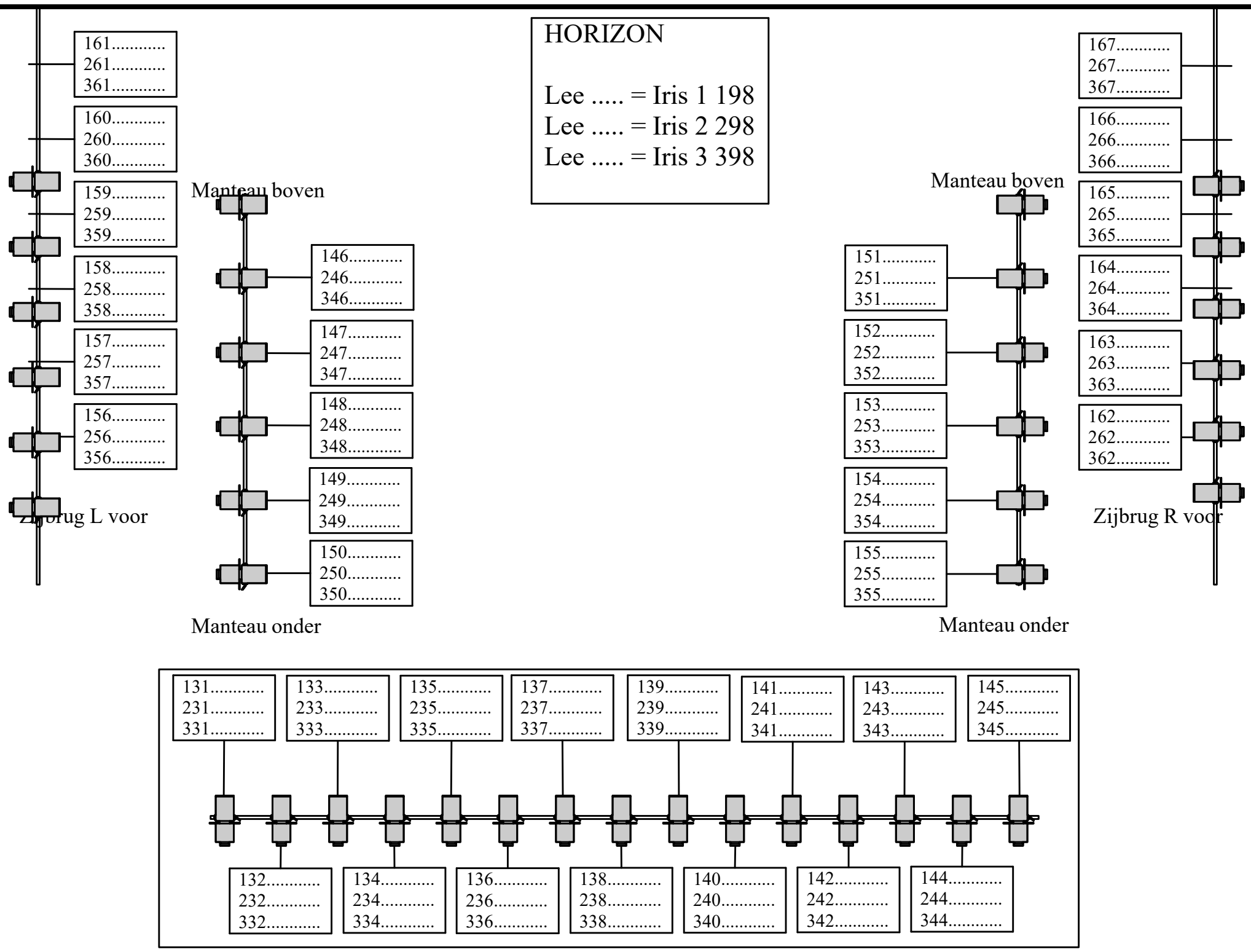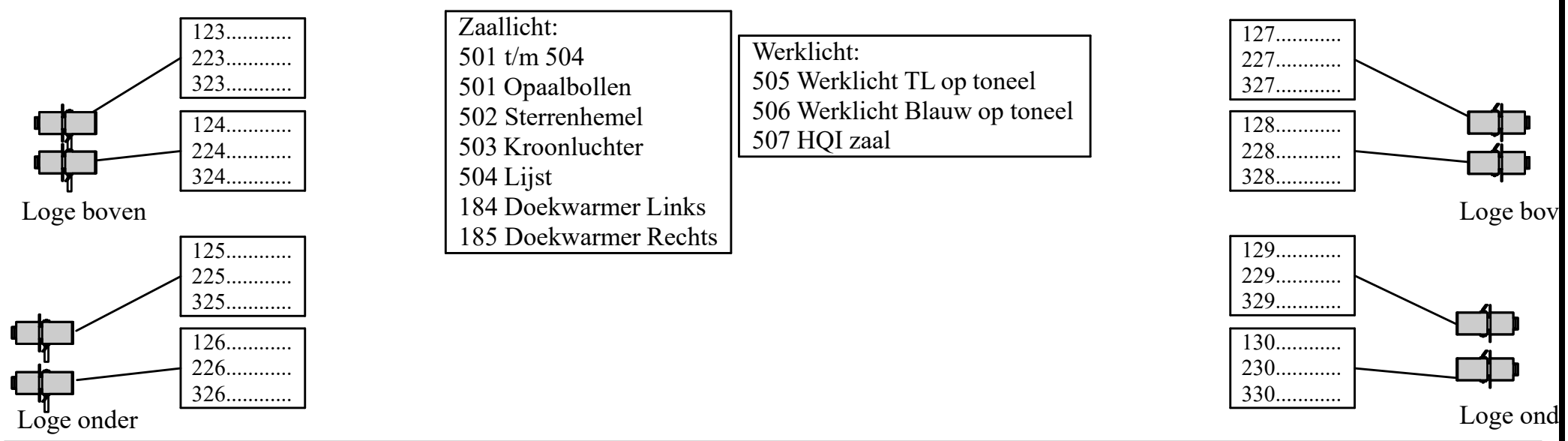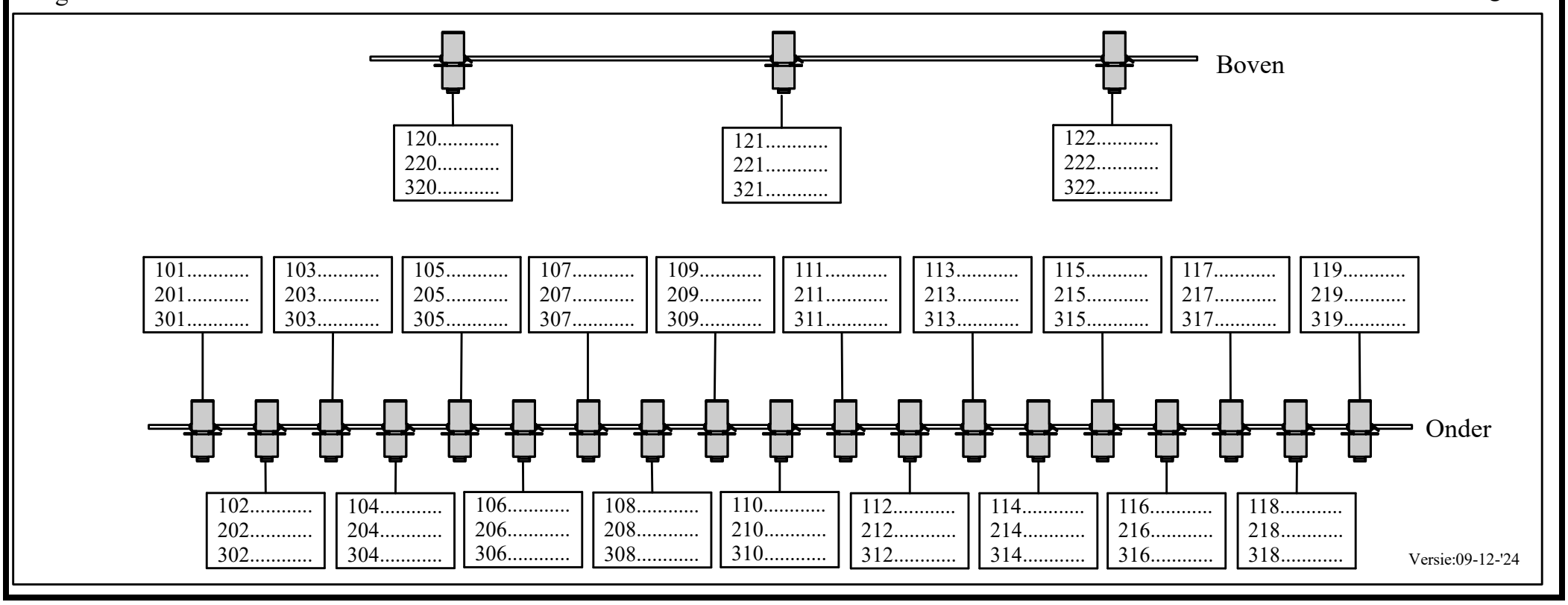
Lee ..... = Iris 1 198
Lee ..... = Iris 2 298
Lee ..... = Iris 3 398